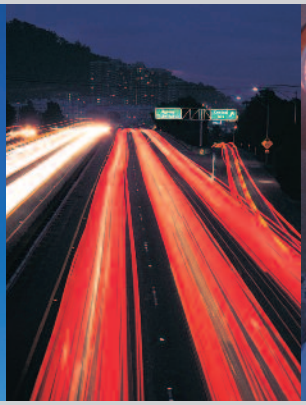
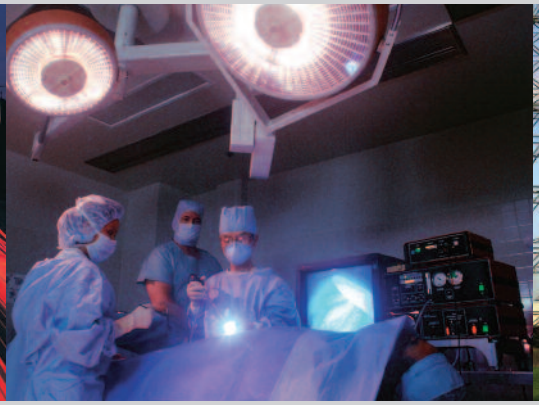

# VRLA Battery SPA 12-26

## Specifications

| | | | | | |
|---|---|---|---|---|---|
| **Nominal Voltage** | **12 V** | | | | |
| **Rated Capacity (25 °C)** | **20hr Rate (1,80V/cell)** | **10hr Rate (1,80V/cell)** | **5hr Rate (1,70V/cell)** | **1hr Rate (1,60V/cell)** | |
| | 26 Ah | 22,4 Ah | 19,2 Ah | 15,5 Ah | |
| **Dimensions (mm) & Weight (kg)** | **Length** | **Width** | **Height** | **Overall Height** | **Weight** |
| | 166mm | 175mm | 125mm | 125mm | 8,60kg |
| **Number / Type of Terminals** | **2 / F2** | | | | |

## *Technical Characteristics*

| | |
|---|---|
| **Design Life at 20°C** | 5 years |
| **Eurobat Classification** | Standard Commercial |
| **Internal Resistance (Fully charged - 25°C)** | 12 mΩ |
| **Short-circuit current** | 1200 A |
| **Max Charging Current** | 9,6 A |
| **Min safe end Discharge Voltage** | 1,60 V/cell |
| **Self discharge per month at 20°C** | 3% |
| **Recommended Charging Voltage at 20°C** | Stand-by use (V/cell): 2,25 to 2,30<br>Cycle use (V/cell): 2,40 to 2,50 |
| **Container Material** | ABS-UL94 HB |
| **Electrolyte Type** | Sulfuric Acid |
| **Type of plates / Alloy** | Flat plates / Lead-Calcium-Tin alloy |
| **Type of Separator** | Absorbant Glass Mat |
| **Valve Type / Operational Pressure** | Rubber / 1-3 psi (70-200 mbar) |
| **Operating Temperature Range** | -20 to +50°C |
| **Storage time at 20°C** | 9 months |

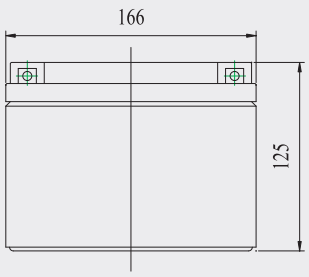


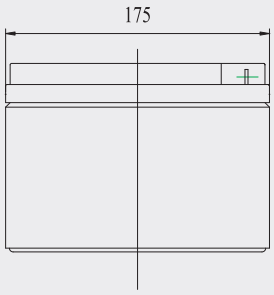


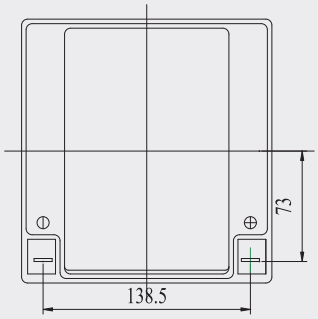


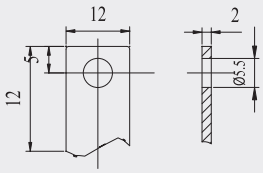


Terminal F2

**SYSTEMS SUNLIGHT S.A.**
**Headquarters**
23rd Km. N.R. Athens - Lamia,
145 65 Agios Stefanos - Attica, Greece
Tel.: +30 210 624 5400,
Fax: +30 210 624 5409

**Manufacturing Plant**
Neo Olvio
67 200 Xanthi, Greece
Tel.: +30 25410 48100,
Fax: +30 25410 95446

SUNLIGHT
creating energy
www.sunlight.gr