BSB VRLA Battery

GB 6-4.2 6V4.2AH

General Series SLA Battery

General Series

General Series Valve Regulated Lead Acid batteries are designed with AGM (Absorbent Glass Mat) technology, high performance plates and electrolyte to gain extra power output for common power backup system applications widely used in the field of UPS, Emergency Lighting System.

Application

- Alarm System
- Cable Television
- Communication Equipment
- Control Equipment
- Security System
- Medical Equipment
- UPS
- Power tools
- Emergency Power System
- Toys

General Features

- Sealed and maintenance free operation.
- Non-Spillable construction design.
- ABS containers and covers(UL94HB, UL94V-0) optional.
- Safety valve installation for explosion proof.
- High quality and high reliability.
- Exceptional deep discharge recovery performance.
- Low self discharge characteristic.
- Flexibility design for multiple install positions.

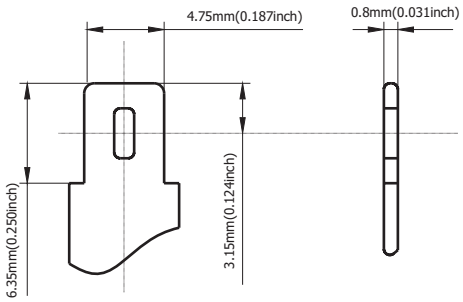

Terminal Dimensions

Construction

- Component .....Raw material
- Positive .....Lead dioxide
- Negative .....Lead
- Container .....ABS
- Cover .....ABS
- Sealant .....Epoxy Resin
- Safety valve .....EPDR
- Terminal .....Copper
- Separator .....Fiber glass
- Electrolyte .....Sulfuric acid

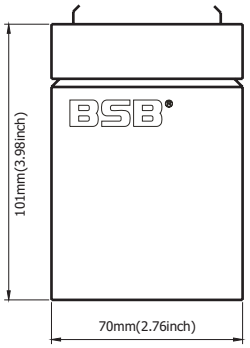

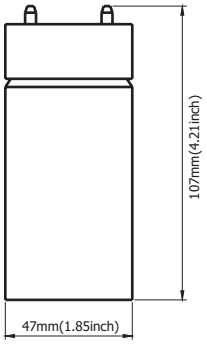

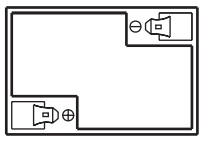

Battery Model	GB6-4.2			
Designed Floating Life	5 Years			
Capacity(25℃)	20HR(0.21A,1.80V)	10HR(0.38A,1.80V)	5HR(0.71A,1.75V)	1HR(2.75A,1.60V)
	4.2AH	3.8AH	3.55AH	2.75AH
Dimensions	Length	Width	Height	Total Height
	70mm(2.76inch)	47mm(1.85inch)	101mm(3.98inch)	107mm(4.21inch)
Approx. Weight	0.77Kg (1.70 lbs)			
Internal Resistance	Full charged at 25℃: 0.025 Ohm			
Self Discharge	3% of capacity declined per month at (25℃)			
Capacity Affected by Temp.(20HR)	40℃	25℃	0℃	-15℃
	102%	100%	85%	65%
Charge Voltage(25℃)	Cycle use		Float use	
	7.2-7.5V(-15mV/ ℃), max. Current: 1.26A		6.8-6.9V(-10mV/ ℃)	

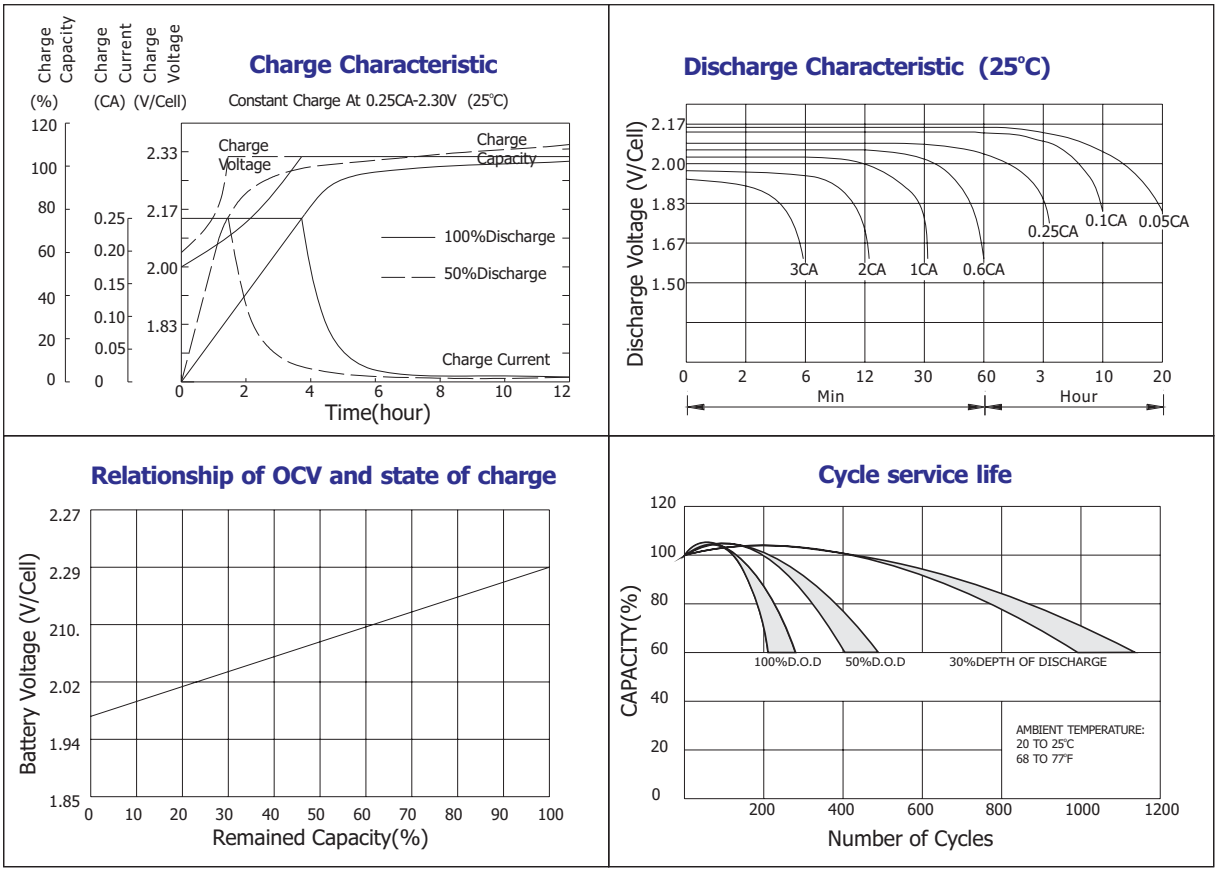

Constant current discharge ratings-amperes at 25℃

F.V/Time	5MIN	10MIN	15MIN	30MIN	1HR	3HR	5HR	10HR	20HR
1.60V	16.4	10.2	7.70	4.70	2.75	1.31	0.76	0.39	0.24
1.67V	15.4	9.68	7.41	4.49	2.71	1.26	0.74	0.39	0.23
1.70V	14.1	9.33	7.23	4.08	2.63	1.18	0.73	0.39	0.22
1.75V	13.8	9.04	7.00	3.88	2.50	1.14	0.71	0.38	0.22
1.80V	12.4	8.63	6.36	3.59	2.34	1.09	0.67	0.38	0.21
1.85V	10.9	8.23	5.72	3.31	2.18	1.05	0.63	0.37	0.21

Constant power discharge ratings-watts at 25℃

F.V/Time	5MIN	10MIN	15MIN	30MIN	1HR	3HR	5HR	10HR	20HR
1.60V	28.8	18.4	14.1	8.46	4.96	2.32	1.29	0.79	0.47
1.67V	27.8	18.0	13.9	8.28	4.93	2.25	1.28	0.78	0.45
1.70V	26.2	17.8	13.8	7.76	4.83	2.15	1.26	0.78	0.45
1.75V	26.3	17.7	13.7	7.53	4.75	2.10	1.25	0.77	0.44
1.80V	24.1	17.5	12.7	7.18	4.48	2.04	1.21	0.76	0.43
1.85V	21.8	16.6	11.5	6.72	4.21	1.98	1.17	0.75	0.41

ISO9001

COPYRIGHT BSB POWER COMPANY LIMITED