+ 44 (0) 208 920 2306
www.energizer-eu.com

ENERGIZER 379

SILVER OXIDE

Specifications

Chemical System:	Silver Oxide (Zn/Ag_2O)
Nominal Voltage:	1.55 Volts
Typical Capacity:	14.5 mAh* (to 1.3 volts)
Capacity Test:	68K ohm continuous drain at 21°C
Typical Weight:	0.25 grams
Typical Volume:	0.06 cubic centimeters
Impedance (40 Hz):	75 to 85 ohms

* Varies according to the applied load, temperature, and cutoff voltage.

Industry Standard Dimensions

mm (inches)

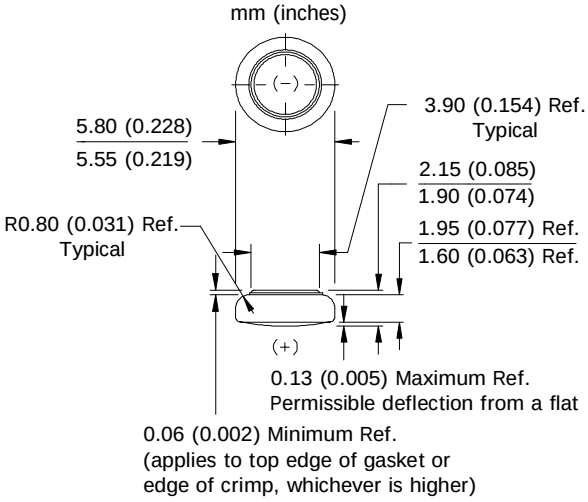

DESIGNED FOR USE ON CONTINUOUS LOW DRAIN

Cross Section

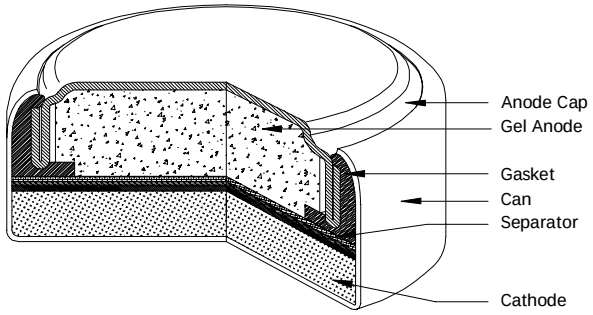

Typical Discharge Characteristics

Typical Performance at 21°C (70°F)

Schedule: Continuous
Typical Drain @1.55V:
0.023 milliamperes
Load: 68K ohm

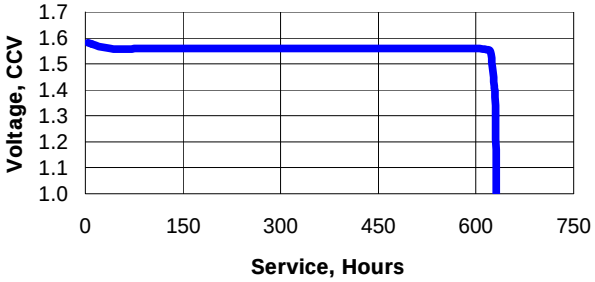

Schedule	Typical Drains at 1.55V (milliamperes)	Load (ohm)	Cutoff 1.3V (hours)
Continuous	0.023	68K	630

Temperature Characteristics

Typical Performance at Low Discharge Rates

Service Effects

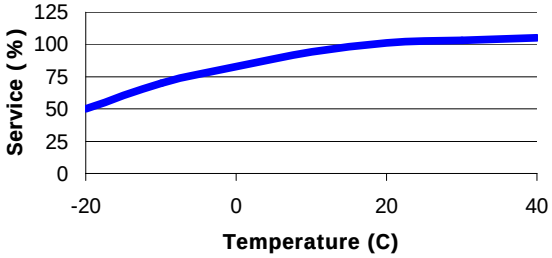

Storage Effects

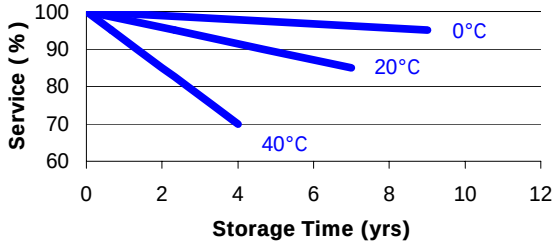

Important Notice

This datasheet contains typical information specific to products manufactured at the time of its publication.

©Energizer Holdings, Inc. - Contents herein do not constitute a warranty.